USN. [24MTASD101]

# FIRST SEMESTER M.Tech EXAMINATION, JANUARY 2025

## AEROSPACE STRUCTURES

**Time: 3 Hours** **Maximum Marks: 100**

**Instructions:**
- **i.** Answer **FIVE** full Questions. Question number 1 and 2 are compulsory. Each question carries 20 marks.
- **ii.** Missing data may be suitably assumed.

| | | | CO's | Blooms Level | Marks |
|---|---|---|---|---|---|
| **1.** | **a.** | Explain the following<br>**i.** Weight, CG and Cg Envelope<br>**ii.** Principle of Virtual Work<br>**iii.** Maxwell Reciprocal and Betti Theorem<br>**iv.** Comprehensive Mission Analysis | **1** | **2** | **6** |
| | **b** | i) Explain the differences between Statically Determinate and Statically indeterminate Structure with concrete examples<br>ii) Explain the differences between symmetrical and Unsymmetrical Bending | **1** | **2** | **4**<br>**4** |
| | **c.** | Solve the following Problem for determining the deflection under the load P =60KN using Strain Energy Method<br> 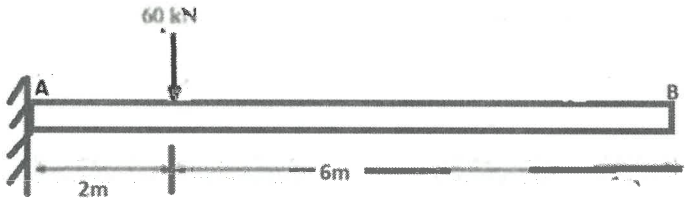 <br> | **2** | **3** | **6** |
| | | | | | |
| **2.** | **a.** | i) Obtain the Relation between E, G and υ.<br>ii) Explain Externally Indeterminate Structures with the help of neat sketches. | **1** | **2** | **10** |
| | **b.** | Explain how the shear flow distribution on the wing section with a neat sketch. | **5** | **2** | **10** |
| | | | | | |
| **3.** | **a.** | Explain the Plane stress and Plane strain. Give suitable example of structural members that can be idealized as Plane stress and Plane Strain. Give reasons for your answers | **3** | **2** | **5** |
| | **b.** | The state of stress at a point is given by | **3** | **3** | **10** |

JAIN (Deemed-to-be University) Learning Resource Centre Jain Global Campus Ramanagar-112

| | | | | | |
|---|---|---|---|---|---|
| | | $$\begin{bmatrix} 20 & -6 & 10 \\ -6 & 10 & 8 \\ 10 & 8 & 7 \end{bmatrix} MPa$$ Determine the Principal stresses and the principal directions | | | |
| | c | Draw the Free body Diagram and the equilibrium equations for the following structures. Do not solve them. Analyze the number of unknowns and state if adequate equilibrium equations are available. 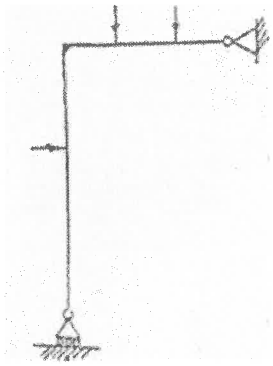 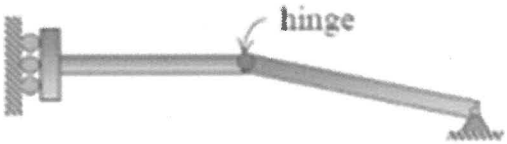  | 1 | 3 | 5 |
| | | **OR** | | | |
| 4. | a. | Obtain the following Shear flow equation for open-section beams $$q_s = -\frac{S_x}{I_{yy}}\int_0^s tx\,ds - \frac{S_y}{I_{xx}}\int_0^s ty\,ds$$ | 5 | 2 | 10 |
| | b. | The beam shown in Figure is simply supported at each end and carries a load of 6000 N. If all direct stresses are resisted by the flanges and stiffeners and the web panels are effective only in shear, calculate the distribution of axial load in the flange ABC and the stiffener BE and the shear flows in the panels 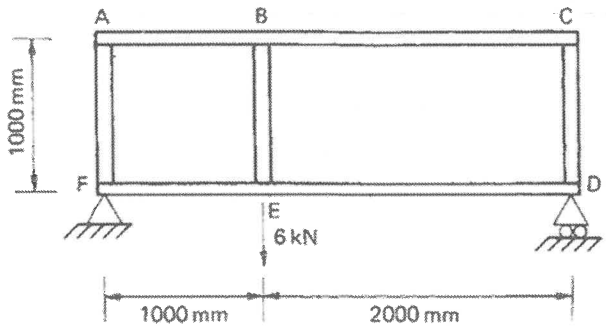  | 4 | 3 | 10 |
| | | | | | |
| 5. | a. | Derive the Relation to determine the Principal axes of the cross section. Derive the formula to determine the principal moments of Inertias $I_{uu}$ and $I_{vv}$. Use this formula to determine the principal axes and the principal moments of inertia for the following Unsymmetrical section. Explain the method of Principal axes to compute the bending stresses for a given Bending Moment $M_y$ and $M_z$. | 2 | 3 | 10 |

| | | | | | |
|---|---|---|---|---|---|
| | | 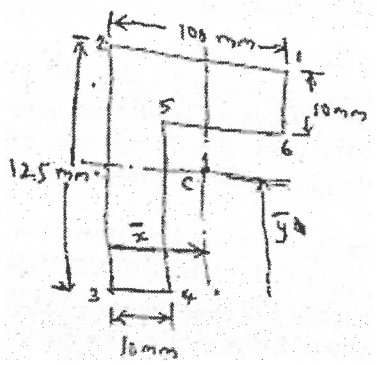 | | | |
| | **b.** | The displacement field in a body is given by:<br>$u_x = (x^2 + 3).10^{-3}$; $u_y = (3y^2z).10^{-3}$; $u_z = (x + 3z).10^{-3}$;<br>Determine the strain tensor components at point P (3,4,3) | **1** | **3** | **3** |
| | **c** | Determine the deflection under the load using unit load method for the portal frame shown in Fig. Take EI=8000KNm$^2$ throughout.<br> 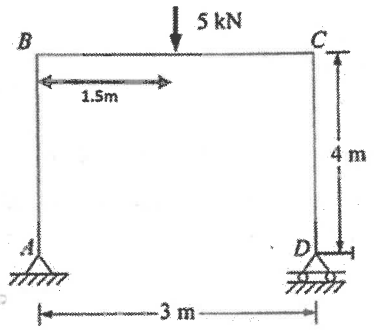 <br> | **2** | **3** | **7** |
| | | **OR** | | | |
| **6.** | **a.** | Determine the Euler buckling equation for a critical load of columns with fixed and pin-ended. | **5** | **3** | **10** |
| | **b.** | Determine the shear flow distribution in the thin-walled Z-section shown in Fig. due to a shear load $S_y$ applied through the shear center of the section.<br> 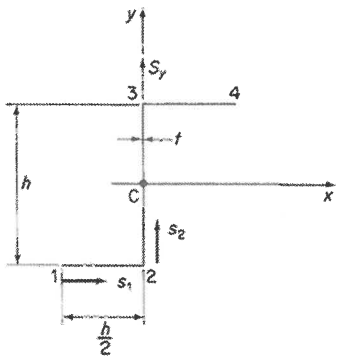 <br> | **4** | **3** | **10** |
| | | | | | |
| **7.** | **a.** | A wing spar has the dimensions shown in Fig and carries a uniformly distributed load of 15kN/m along its complete length. Each flange has a cross sectional area of 500mm$^2$ with the top flange being horizontal. If the flanges are assumed to resist all direct loads while the spar web | **5** | **3** | **10** |

| | | | | | |
|---|---|---|---|---|---|
| | | is effective only in shear, determine the flange loads and the shear flows in the web at sections 1 and 2m from the free end. 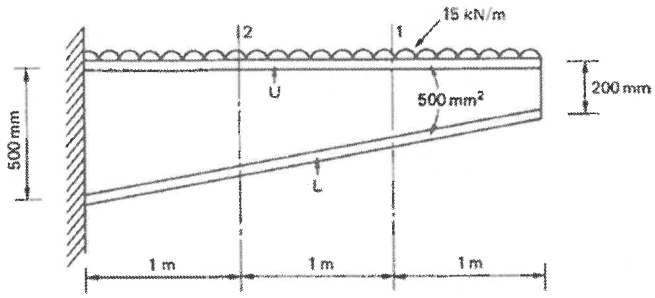  | | | |
| | **b.** | Explain the Inelastic buckling of plates with the help of 'K' Vs 'a/b' graphs. | **6** | **2** | **10** |
| | | **OR** | | | |
| **8.** | **a.** | Obtain the critical Buckling equation for thin plates subjected to compressive load. | **6** | **2** | **10** |
| | **b.** | Determine the value of 'g' for Z and the top hat section stiffener-skin combination. | **6** | **3** | **10** |